Cone Bottom Reclaimer

JEFFREY RADER
UNITED STATES • CANADA • SWEDEN

Cone Bottom Reclaimer

A heavy-duty industrial reclaimer for storage bins with cone-shaped bottoms.

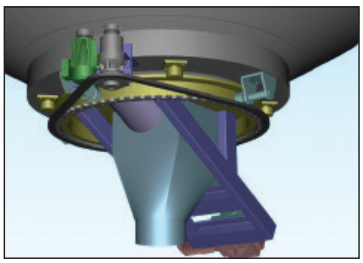

Features/Advantages

What's Old is New Again

Reclaiming from a storage bin in recent times has been done with a circular screw in a flat bottom bin. Jeffrey Rader has brought back the ability to reclaim materials from a storage bin with a cone-shaped bottom — and with many new improvements.

> *"We inspected our reclaiming screw after a year of continuous service and saw no appreciable sign of wear, which exceeded our expectations."*

Engineered for Long Service Life and Ease of Maintenance

The Jeffrey Rader Cone Bottom Reclaimer (CBR) has been engineered for heavy-duty industrial applications that operate 24 hours a day, 7 days a week. The CBR's design eliminates large diameter, difficult to maintain bearings typically used on other units. The reclaiming screw, bearings and drives can all be maintained and/or removed from outside of the bin and are of a standard off-the-shelf design. In today's environment with lean operations, you need a device that is reliable and low maintenance. The Jeffrey Rader CBR is that device.

TERRASOURCE GLOBAL

www.terrasource.com ■ info@terrasource.com

Cone Bottom Reclaimer

Features/Advantages (continued from other side)

Advantages

The CBR uses simple technology to make a difficult application reliable, durable, and simple to operate and maintain. When located in the cone of a bin, gravity assists in moving the material towards the outlet along the cone sides.

A variable-speed drive and special center discharge tube maintains a constant flow of material to a metering device located below. Because of the angled screw design, the CBR also uses less horsepower than typical flat bottom bin reclaimers. The slewing drive mechanism utilizes a constant torque variable speed drive (VFD), planetary gearbox and chain drive arrangement. The VFD motor provides constant torque applied to the slewing drive, ensuring that the reclaiming screw is always reclaiming material at its highest efficiency, while not overburdening the screw with material or stress when it encounters more dense areas of material.

Long Screw Life

While the ability to maintain the reclaiming screw is much easier than any other bin reclaiming device, Jeffrey Rader employs the latest in technology for ensuring the reclaiming screw will last a long time without repair or replacement. Using alloy materials for its construction in conjunction with the best in coating available on the market today, the Jeffrey Rader reclaiming screw will provide long life, minimizing maintenance requirements of the unit.

Dimensions and Weights

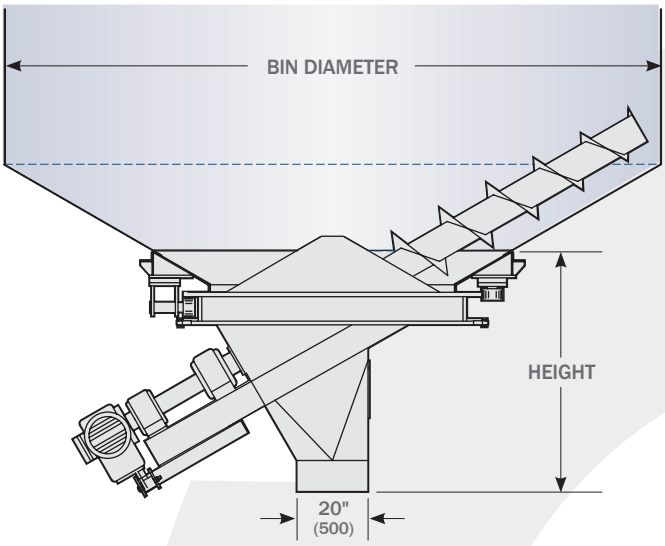

APPROXIMATE LAYOUT DIMENSIONS* AND SHIPPING WEIGHTS FT. (M)

MODEL	MAX. BIN DIAMETER	HEIGHT	MAX. STORAGE CAPACITY (TONS)	MAX. RECLAIM CAPACITY (TPH)	LBS (KG)
CBR-15	15' (4.6)	5' 8" (1.7)	250	75	17,980 (8,156)
CBR-30	30' (9.2)	6' (1.8)	1,000	125	21,340 (9,680)

* *Certified drawings will be furnished for installation. Installation supervision is available.*

CRUSH. FEED. PROCESS. CONVEY. STORE.

TERRASOURCE GLOBAL

www.terrasource.com ■ info@terrasource.com