Jeffrey Rader®
EDK Rotary Feeder

Precision Feeding & Delumping for Extreme Polyolefin Processing Conditions

EDK Rotary Feeder/Delumper (25 x 30)
with Optional Stainless-Steel Transition

Jeffrey Rader® EDK Rotary Feeder/Delumper

Engineered for heavy-duty service and highly accurate, controlled volumetric feeding of polyolefin resins under high pressures and temperatures.

Engineered for Maximum Performance

The EDK (E-Series Double Knife) Rotary Feeder/Delumper features dual top knives for shearing oversized materials in either rotation direction. Its double-helical, eight-blade, closed-end rotor maintains a two-blade labyrinth seal to minimize gas leakage. A shaft seal purge contains hydrocarbons, while pocket purge ports aid in sticky material removal. The rotor blades, ground to an RMS 16-22 finish, prevent build-up, and 410 stainless steel overlay on the tips ensures a precise fit with the rotor bore. Spring-loaded end seals maintain a high level of sealing.

EDK Rotary Feeder Inlet

EDK Rotary Feeder - Model 2030 Top Inlet Feed

Adjustable knives extend wear life and optimize shearing efficiency, while adjustable end seals reduce N_2 leakage, eliminating the need for upstream N_2 purging. The EDK's seal arrangement prevents product migration, avoiding rotor drag and maintenance issues. Knives and seals can be adjusted without removing the unit or interconnecting piping. Heavy-duty outboard bearings minimize thermal effects from high housing temperatures, enabling operation at a 15 psi (1 bar) differential pressure and temperatures up to 230°F (110°C), with a maximum static differential pressure of 50 psi (3.4 bar).

Engineered for Reliability, Proven Worldwide

Designed in collaboration with polyolefin production leaders, the Jeffrey Rader® EDK™ Feeder sets the standard for reliable performance in extreme conditions. Backed by 40+ years of innovation, it operates in over 25 countries worldwide

Efficient Shearing, and Extended Wear Life for Optimal Performance

Aggregates • Asphalt • Coal • Concrete • Recycle and Waste Management
Forestry • Minerals • Mining • Material Handling • Road Building • Water Intake

Precise Metering Rotary Airlock with Anti-Stall Technology

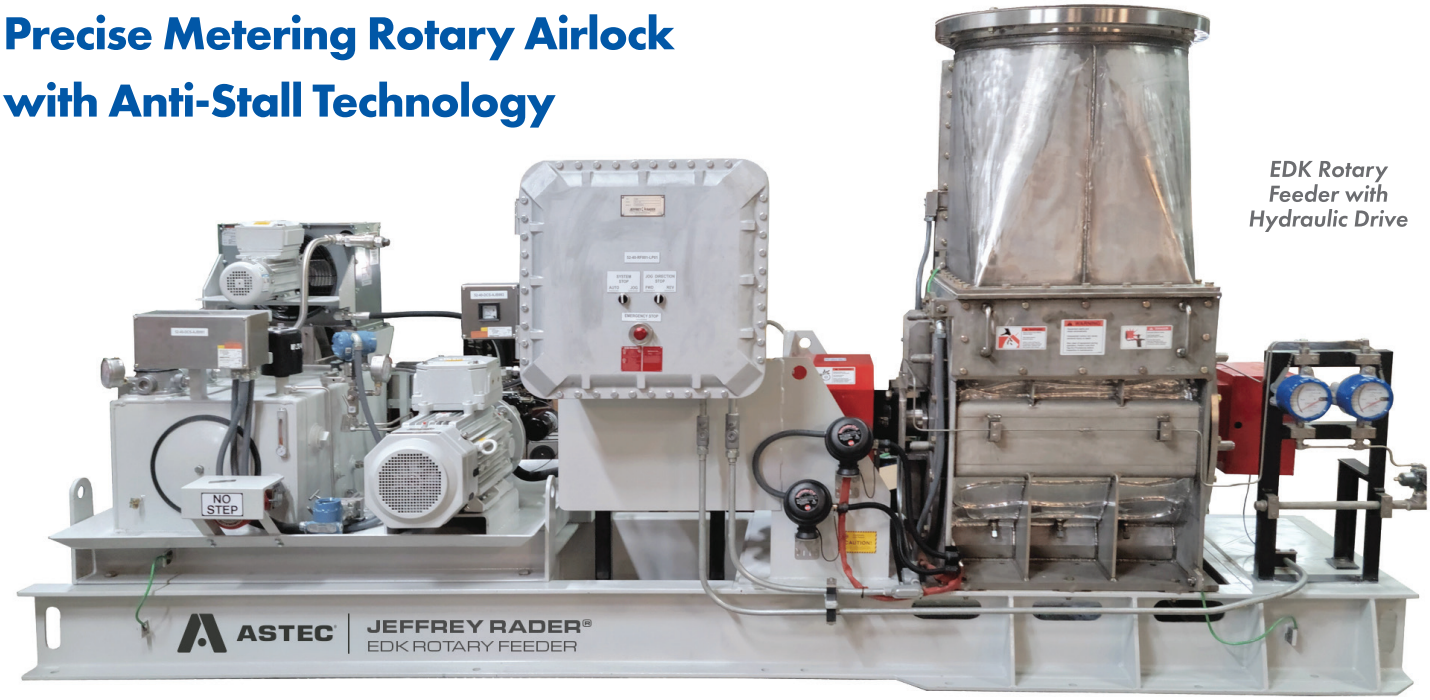

EDK Rotary Feeder with Hydraulic Drive

Delumping

When the EDK encounters a larger sized agglomerate of polyolefin material, initially it shears the material in the forward direction. Should an obstruction interfere with this process, the anti-jamming feature automatically reverses the rotation to shear the lump in the opposite direction. This cycle repeats up to three times. If the material remains intact and the jam is not resolved, the system enters a stall condition, triggering an alarm to alert the operator. Once the obstruction is cleared, the EDK automatically resumes operation in the forward direction.

WATCH ON YouTube

Check out the animation how the Jeffrey Rader® EDK Rotary Feeder/Delumper is engineered for heavy-duty service and highly accurate, controlled rotational speed for precise volumetric feeding

EDK Rotary Feeder/Delumper Model Specifications

Standard Features
Plug-and-play round inlet/outlet connections
A36 carbon steel (304ss option) or stainless steel construction
Special hard facing on rotor tips
OSHA protective guarding
Knives and end seals adjustable
Shaft packing seals with nitrogen purge
Polished rotor surfaces prevent material build-up
Shaft packing seals with nitrogen purge regulator

Optional Features	
Rotor	Pocket dividers to limit piece size
Drives	Variable speed hydraulic
	Variable speed electromechanical
Housing	Chrome bore can be provided
	Self-regulating heat tracing
	Full-Wrapped Insulated Blanketing
Accessories	Customized round inlet/outlet transitions
	Shaft seal purge regulator

Dimensions and Weights

EDK WITH HYDRAULIC DRIVE

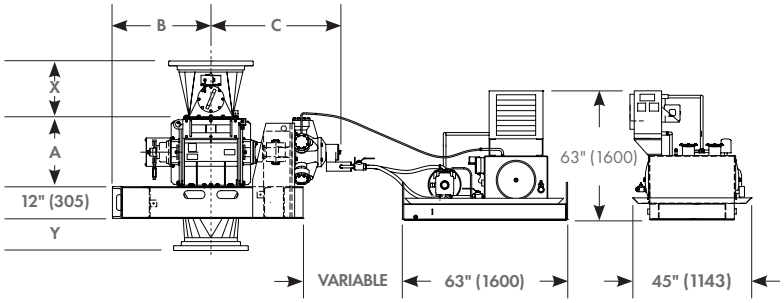

EDK WITH ELECTROMECHANICAL DRIVE

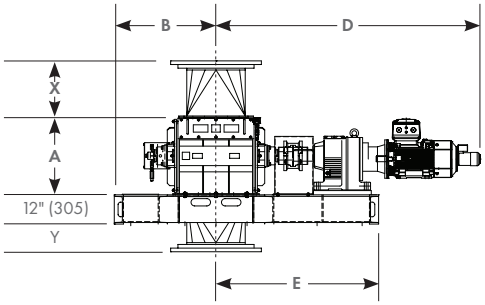

APPROXIMATE LAYOUT DIMENSIONS AND SHIPPING WEIGHTS

MODEL DESIGNATION		2020	2030	2530	3030
Size	Measure	20 x 20	20 x 30	25 x 30	30 x 30
A	in (mm)	34″ (864mm)	34″ (864mm)	39″ (991mm)	45″ (1143mm)
B	in (mm)	34″ (864mm)	39″ (991mm)	39″ (991mm)	39″ (991mm)
C	in (mm)	50″ (1,270mm)	55″ (1,397mm)	55″ (1,397mm)	55″ (1,397mm)
D	in (mm)	104″ (2642mm)	108″ (2,713mm)	108″ (2,713mm)	108″ (2,713mm)
E	in (mm)	62″ (1,575mm)	62″ (1,575mm)	67″ (1,702mm)	67″ (1,702mm)
X**	in (mm)	24″ (610mm)	24″ (610mm)	24″ (610mm)	24″ (610mm)
Y**	in (mm)	12″ (305mm)	12″ (305mm)	12″ (305mm)	12″ (305mm)
Displacement (100% Full)	ft3/rev (m3/rev)	1.97 (0.056)	3.29 (0.093)	5.66 (0.160)	8.61 (0.240)
Speed Range	rpm	2-30	2-30	2-30	2-25
Maximum Torque Available	lbf • in (N • m)	86,980 (9,800)	86,980 (9,800)	86,980 (9,800)	86,980 (9,800)
Base Weight	lbs (kg)	1,647 (736)	2,130 (956)	2,800 (1,270)	3,760 (1,705)
Unit Weight w/ Hydraulic Motor & Base	lbs (kg)	3,042 (1,380)	3,575 (1,622)	4,160 (1,890)	5,220 (2,370)
Unit Weight w/ Electromechanical Drive	lbs (kg)	2,750 (1,250)	3,230 (1,470)	3,900 (1,770)	4,860 (2,210)

*** The X and Y dimensions are considered standard but may change depending on requirements for installation site.*