Jeffrey Rader® EnduraHog™ Crushers

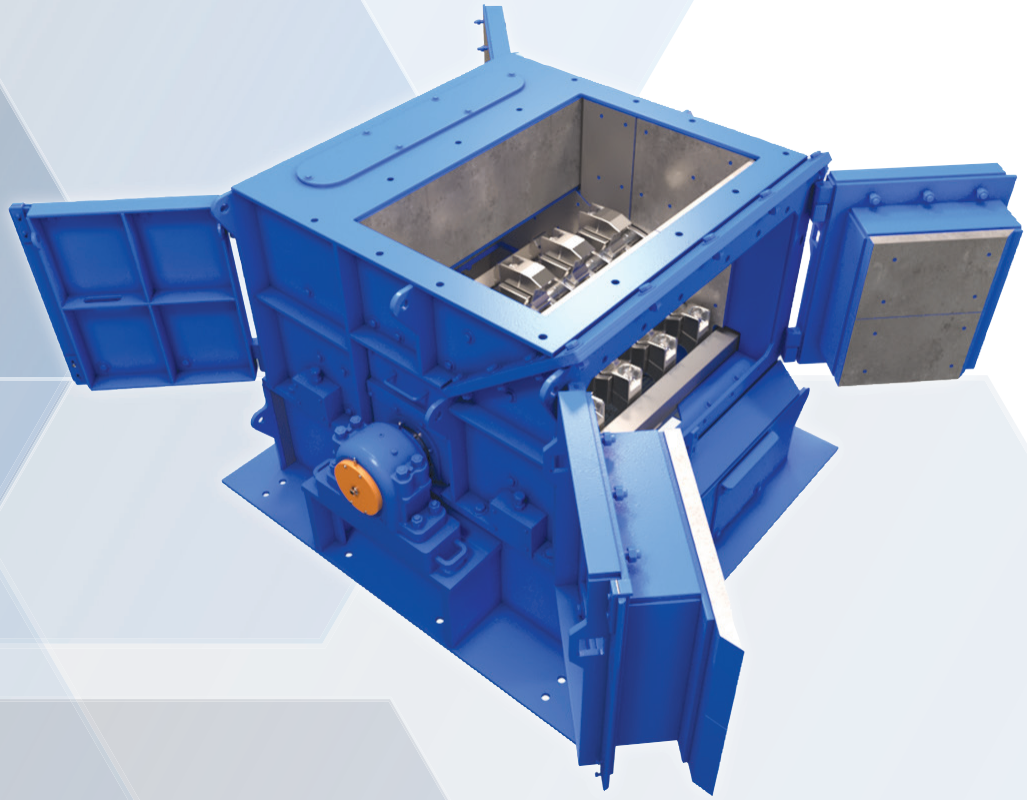

The Industry's Most Recognized and
Most Versatile High-Capacity Crusher

Built Tough. Designed for Access.

Our Jeffrey Rader® hammermills are ruggedly engineered for reliability and effortless maintenance. Hinged, swinging doors provide unmatched access to internal components, making inspections and adjustments fast and safe. Ideal for moderate-volume applications with changing material requirements, these units combine proven durability with exceptional ease of service.

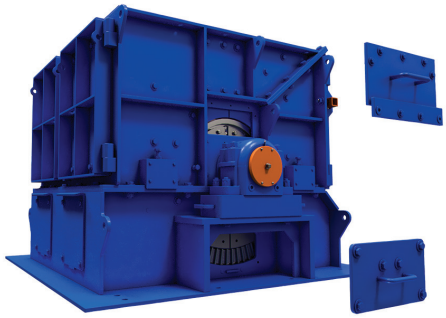

Easy Access Panels to Internal Wear Components for Easy Maintenance

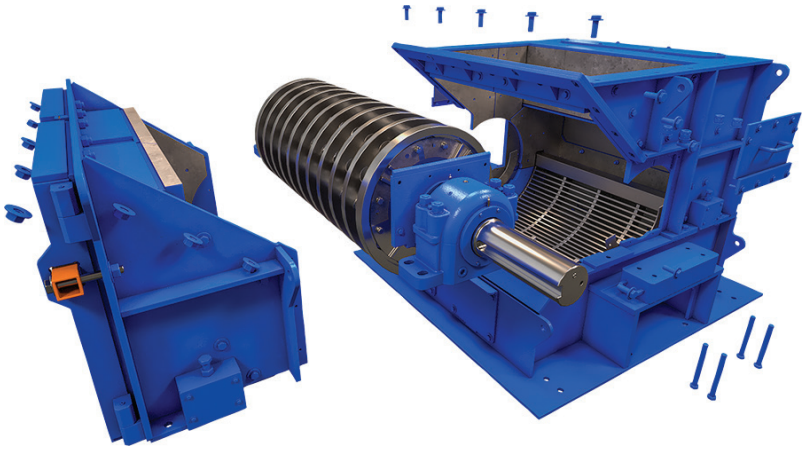

Remove Rotor Assembly without Touching Chute Work

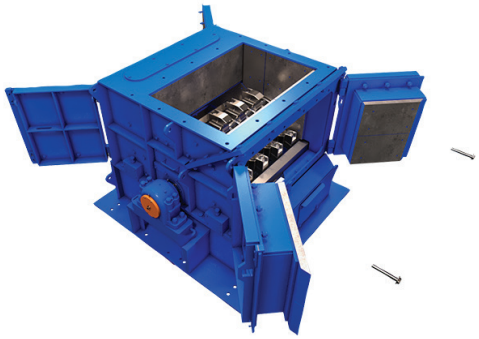

Both Front & Back Easy-Access

Industrial Applications					
By Sector	**Classic**	**Chip-Sizer™**	**Flextooth®**	**Grinder**	**SuperSlugger™**
Agricultural/Food Processing	✓	✓			✓
Biofuels & Pellets Production	✓	✓			✓
Biomass Energy Processing	✓	✓			✓
Cement Production			✓	✓	
Chemical Processing			✓	✓	
Limestone & Lime Processing			✓	✓	
Manufacturing Products Preparation			✓	✓	
Mining Operations			✓	✓	
Petroleum Coke Processing			✓	✓	
Power Generation	✓		✓	✓	✓
Pulp & Paper Manufacturing	✓	✓			✓
Recycling Operations	✓			✓	✓
Renewable Power Production	✓	✓			✓
Sawmill Operations	✓	✓			✓
Steel Production				✓	
Waste Management	✓				✓
Wood Products / Furniture Manufacturing	✓	✓			✓

BRUTE ARMOR™ Slant-Flow® Screen Grates

Engineered for Relentless Performance

Engineered for extreme durability, our Brute Armor™ premium Slant-Flow® Screen Grates deliver up to 4x the wear life of brittle bi-metal alternatives—making them the top choice for high-demand industrial environments. Embrace the Brute Armor™ premium line of Slant-Flow® Screen Grates, purpose-built to withstand tramp metal, boost throughput, and keep your operation running at peak efficiency.

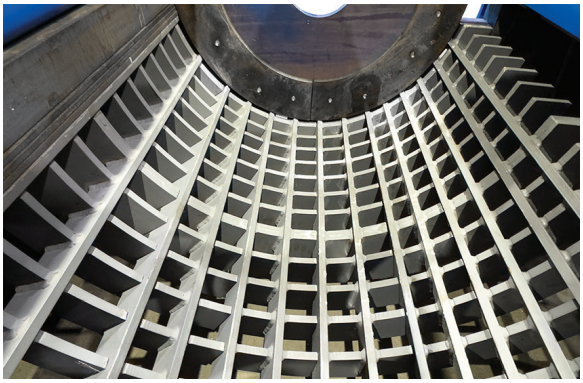

Their angled, self-cleaning design drives smoother material flow, enhanced shredding action, and faster evacuation, minimizing clogging and downtime while extending equipment life. Every unit is backed by a warranty on workmanship—because peak performance should come with peace of mind.

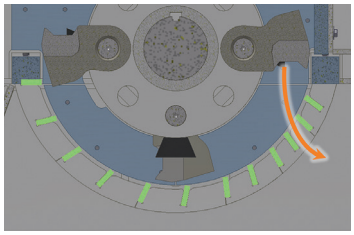

Slant-Flow® grate material flow

Slant-Flow® Screen Grates

- Greater Shredding Action
- Faster Material Evacuation
- Reduced Clogging and Diminished Fines and Pins
- Minimized Chances of Operational Failure

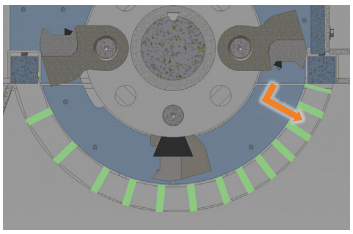

Conventional grate material flow

Brute Armor™ STRENGTH

- Minimum maintenance and maximum durability.
- Up to 4x longer wear life than competitors.
- Tramp-metal resistance for long-lasting performance.
- Superior resilience compared to bi-metal parts.
- Minimal operational disruptions.
- Warranty on workmanship ensures quality.

Brute Armor™ Superiorities

- Tight chemistry controls ensure optimal alloy performance.
- Full hardness through plate thickness (unlike standard AR plates).
- Enhanced weld fusion from precise carbon/hydrogen levels.
- Fabricated by AWS-certified welders with full workmanship warranties.

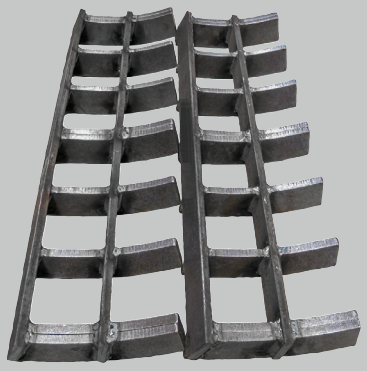

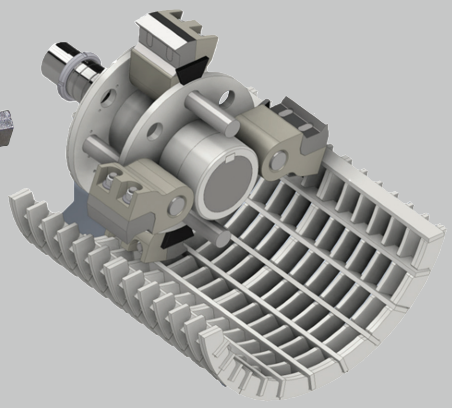

Brute Armor™: 4x Longer Wear Life, Backed by Quality Warranties

EnduraHog™ Redefines Crushing with Every Configuration!

Introducing EnduraHog™, the ultimate material crushing solution! With innovative housing designs and ultra-large access doors, EnduraHog™ offers unmatched accessibility to internal components like hammers, screen grates, and breaker bars, ensuring faster, easier, and safer maintenance. Available in various sizes and hammer configurations, it delivers optimal performance and durability for industries like mining, forest products, waste, and recycling. Whether it's the Classic, Grinder, Flextooth®, SuperSlugger™, and Chip-Sizer™ model, EnduraHog™ provides a wide range of configurations to meet diverse application needs.

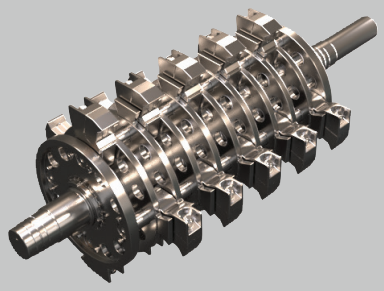

Classic Wood Hog

Renowned for decades, this original workhorse is celebrated as the most reliable and durable machine for precise wood and bark sizing. Our EnduraHog™ offer the widest variety of configurations and hammer sizes. Specific requirements of different industries are met by ensuring versatility to tackle diverse material crushing challenges effectively.

Classic Features — Innovative Housing Design with Easy Access Technology

- Direct front and rear access to breaker bars enables fast, convenient maintenance without disassembly, improving operational efficiency.
- Enhanced access to internal wear components through upgraded housings and ultra-large doors allows quicker, safer maintenance while reducing downtime and injury risk.
- Available in a wide range of configurations and hammer sizes.
- Innovative housing designs deliver optimal performance and durability without sacrificing ease of maintenance, ensuring long-term reliability.
- The premium Duratip® symmetric hammer extends service life by allowing the hammer to be flipped for continued use, reducing replacement costs.
- A heavy-duty rotor with grinder hammers provides rugged performance, precise sizing, and longer service life, lowering maintenance and replacement frequency.

Chip-Sizer™

A true no-knife rechipper, Chip-Sizer™ use unique, "soft touch" semi-swing hammers to precisely fracture oversized wood chips along fiber lines.

Enhanced Features

- **No-Knife Chipper:** A "soft touch" approach without knives to precisely fractures oversized wood chips.
- **Top-Size Control:** Offers the tightest control over chip top-size in the market.
- **Recovery Rates:** Achieves recovery rates of 85%-95% for oversized chips.

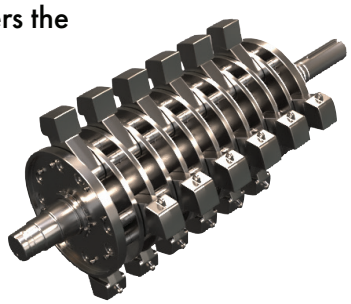

SuperSlugger™

Reigns supreme for sizing the biggest wood infeeds — railroad ties or wooden spools — its extra heavy hammers handle the toughest tasks

Enhanced Features

- **Extra Heavy Hammers:** Designed to handle the largest wood infeeds, from railroad ties to hefty timber.
- **Robust Rotor:** Features heavier and wider hammers for efficient processing of massive infeed pieces.

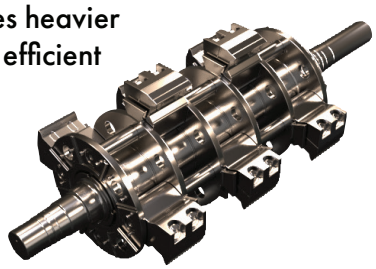

Flextooth®

Designed to crush harder mining and aggregate materials with specialized hammers built to offer maximum power at lower, more efficient speeds.

Enhanced Features

- **Minimized Fines Production:** Lower operation speeds minimize fines generation.
- **Uncrushable Protection Safeguards**
- **Combination Crushing:** Combines roll and impact crusher strengths for high capacity and compression crushing.

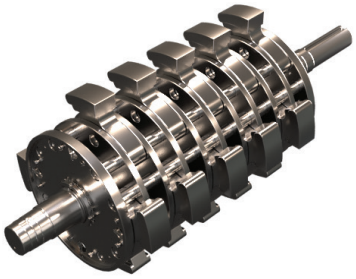

Grinder

An "all purpose" crusher. Used in facilities to size everything from building materials to recyclables, pharmaceutical waste, glass, biomass, plastics, and more.

Enhanced Features

- **Versatility:** Designed for a wide range of applications, from processing building materials to recyclables, pharmaceutical waste, glass, biomass, plastics, and more.
- **Various Sizes and Configurations Available:** multiple options to suit different processing needs.

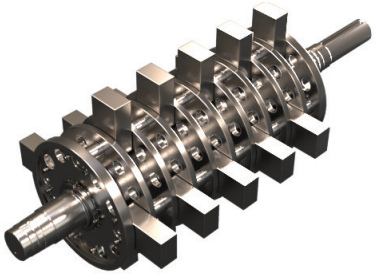

How it Works

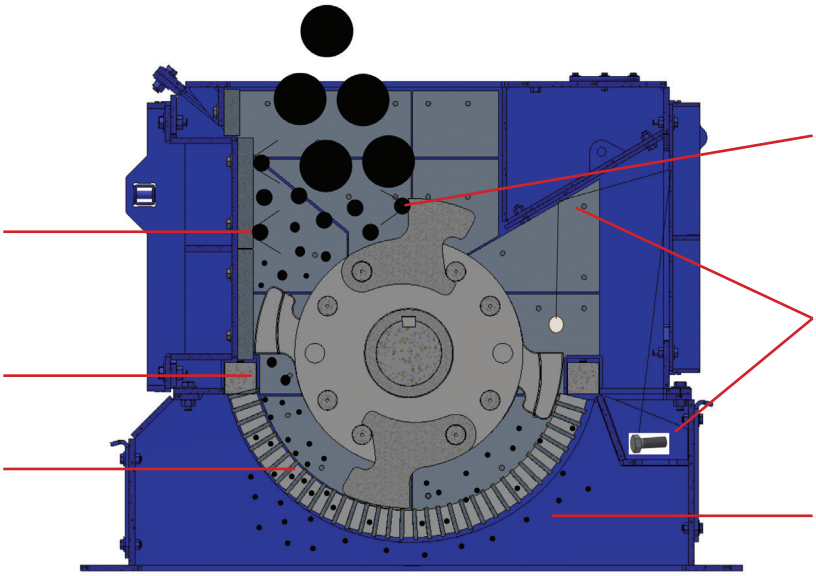

The EnduraHog™ is the Next Generation of Hammermills

Engineered for performance, built for endurance. Our innovative material sizing solutions serve a wide range of industries—delivering unmatched durability, low cost of ownership, and simplified maintenance.

Each of the five distinct EnduraHog™ models combines rugged, all-steel construction with a fully lined housing and integral metal trap for superior protection, ensuring reliable operation in even the toughest applications.

Parts Overview

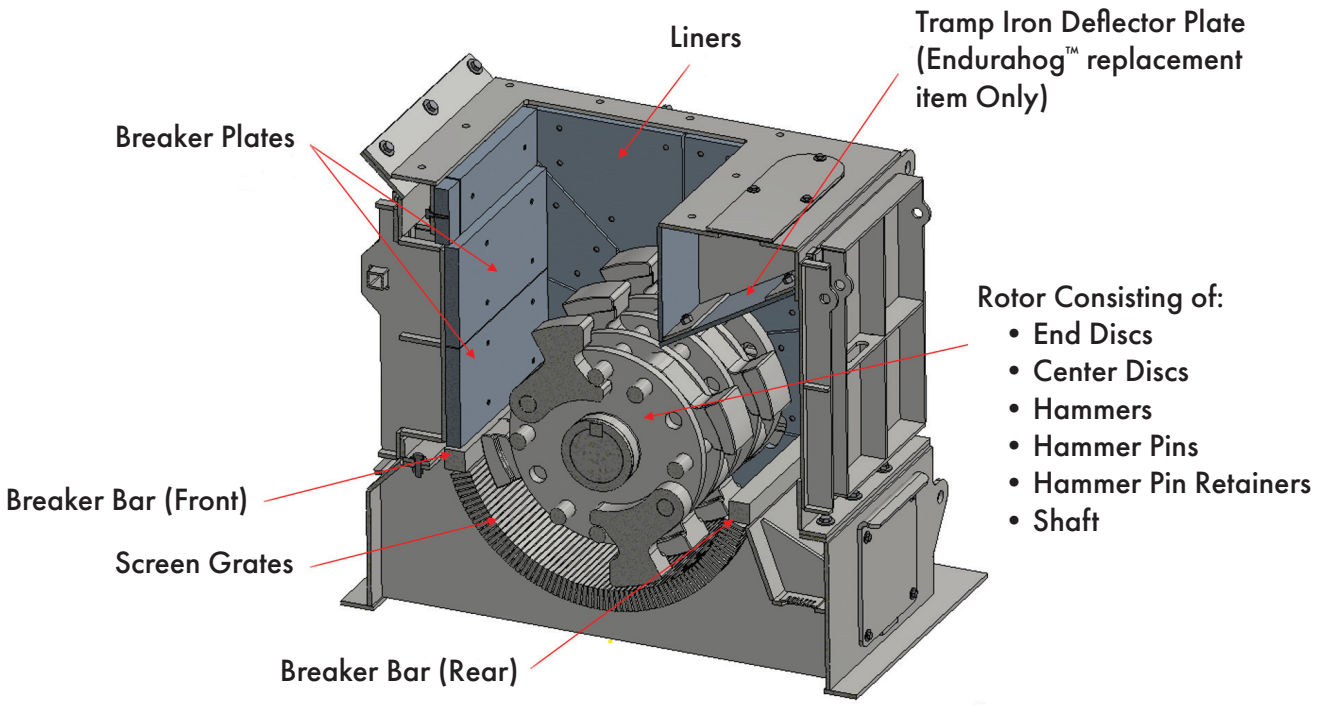

Premium Jeffrey Rader® Critical Wear Hammers

Our premium hammers provide exceptional wear resistance, impact protection, and long service life for demanding applications, maximizing performance and reliability while reducing downtime and maintenance costs.

Ultralloy®

Proprietary super-steel alloy designed for abrasion resistance and high impact without fracturing.

- High durability minimizes downtime and maintenance costs
- Superior shredding performance keeps product size uniform

Ultralloy® XP "eXtra Performance"

A custom-engineered hard-facing design that can double hammers' wear life

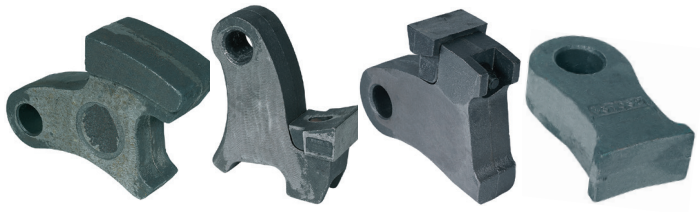

Ultralloy® Hammers Come in Wide Variations

Duratip®

Our increasingly popular Duratip® features an innovative replaceable tip design that delivers exceptional abrasion resistance, longer service life, superior shredding efficiency, and easier maintenance.

- Replaceable tips with reusable shanks decrease operating costs and downtime
- Improved center of gravity and increased weight shred large pieces without laying back
- Unique geometry enhances shredding action and maintains tip clearance

DuraTip® replaceable hammer tips and shanks are available in a wide range of sizes and configurations to optimize applicational performance.

Power & Mining Application Info

- Excellent top-size control
- Built rugged and long-lasting
- New & Improved maintenance access vs competition
- Limestone, Coal, Gypsum, Glass, Fiberglass, Plastic Bottle recycling, Clay, Talc...

Machine	Max Capacity (STPH)		BD (PCF)	Max Input (inches)	Nominal Max Output (inches)	Nominal Min Output (inches)	Max Red. Ratio	HP/STPH	Operational Speed
FT Hammermills (Coal)									
30 FTE	140 (at 2")	25 (at 1/4")	50	14	2	8 mesh (0.094")	12:1	0.25 to 3.00	600-1800
34 FTE	225 (at 2")	40 (at 1/4")		14					600-1800
45 FTE	385 (at 2")	75 (at 1/4")		20					600-1450
56 FTE	635 (at 2")	115 (at 1/4")		24					600-1200
59 FTE	835 (at 2")	150 (at 1/4")							600-1200
611 FT	1200 (at 2")	220 (at 1/4")		28					600-900
ABE Hammermills (Coal)									
MME	45 (at 1.5")	5 (at 8m)	50	3	1.5	8 mesh (0.094")	12:1	0.50 to 5.00	900-1800
30ABE	90 (at 1.5")	10 (at 8m)		4					
34ABE	150 (at 1.5")	16 (at 8m)		5					
45ABE	240 (at 1.5")	27 (at 8m)		6					
56ABE	450 (at 1.5")	50 (at 8m)		10					
ABE Hammermills (Limestone)									
MME	35 (at 3")	4 (at 8m)	100	3	3	8 mesh (0.094")	12:1	0.60 to 7.00	900-1800
30ABE	75 (at 3")	8 (at 8m)		4					
34ABE	120 (at 3")	14 (at 8m)		5					
45ABE	190 (at 3")	23 (at 8m)		6					
56ABE	320 (at 3")	37 (at 8m)		10					
59ABE	440 (at 3")	53 (at 8m)							

Forestry Product Application Info

- EnduraHog™ Classic – Wood bark & waste, wood chips, small limbs, broken pallets, paper recycling biomass...
- EnduraHog™ SupperSlugger™ – Railroad ties, oversized wood logs & branches.
- EnduraHog Chip-Sizer™ – Oversize wood chips and bark.

Model	Type	Max Capacity (STPH) Hardwood		Max Capacity (STPH) Softwood		Max Input (inches)	Nominal Max Product (inches)	Nominal Min Product (inches)	HP/STPH	Operating Speed
34	WB	8 (at 3/4")	15 (at 3")	10 (at 3/4")	20 (at 3")	4" Diameter x 18"	3"	3/4"	6-20	1800
45	WB	10 (at 3/4")	25 (at 3")	14 (at 3/4")	32 (at 3")	4" Diameter x 24"	3"	3/4"		1450
55	WB	19 (at 3/4")	40 (at 3")	26 (at 3/4")	50 (at 3")	6" Diameter x 24"	3"	3/4"		1200
56	WB	23 (at 3/4")	48 (at 3")	30 (at 3/4")	60 (at 3")	6" Diameter x 30"	3"	3/4"		1200
58	WB	32 (at 3/4")	65 (at 3")	42 (at 3/4")	85 (at 3")	6" Diameter x 36"	3"	3/4"		1200
66	WB	40 (at 3/4")	90 (at 3")	64 (at 3/4")	120 (at 3")	12" Diameter x 48"	3"	3/4"		900
68	WB	48 (at 3/4")	120 (at 3")	80 (at 3/4")	155 (at 3")	12" Diameter x 66"	3"	3/4"		900
30	CS	2 (at 5/8")	3 (at 1 3/4")	3 (at 5/8")	8 (at 1 3/4")	Oversize/Overthick Disc Chipper Chips	1 3/4"	5/8"	5-20	400-1200
34	CS	5 (at 5/8")	7 (at 1 3/4")	7 (at 5/8")	12 (at 1 3/4")		1 3/4"	5/8"		
45	CS	12 (at 5/8")	22 (at 1 3/4")	14 (at 5/8")	40 (at 1 3/4")		1 3/4"	5/8"		
56	CS	18 (at 5/8")	34 (at 1 3/4")	22 (at 5/8")	64 (at 1 3/4")		1 3/4"	5/8"		

Dimensions and Weights

30

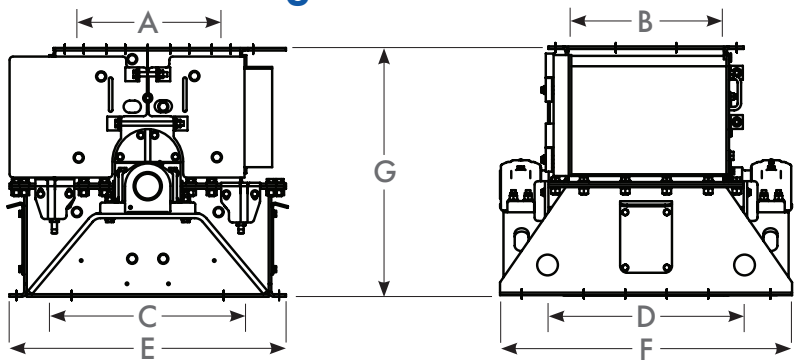

EnduraHog™ Classic (WB)
EnduraHog™ Chip-Sizer™ (CS)
EnduraHog™ Flextooth® (FT)
EnduraHog™ Grinder (AB)
EnduraHog™ SuperSlugger™ (SS)

34

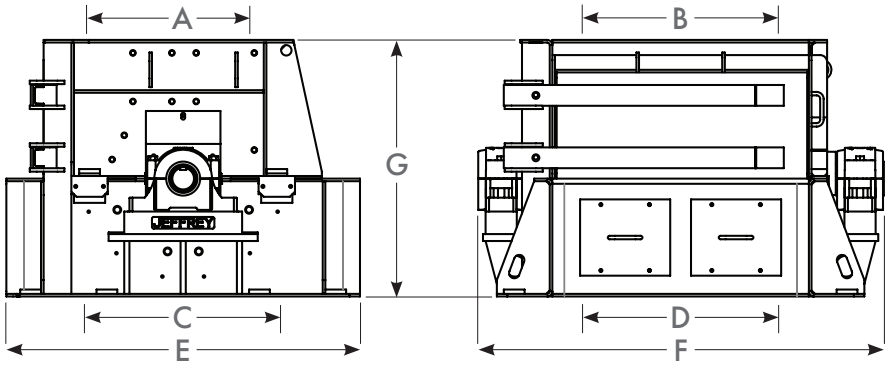

45+

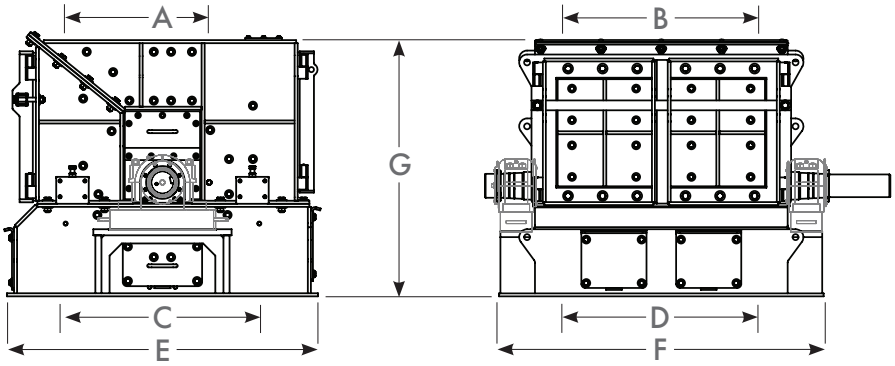

EnduraHog™ Approximate Layout Dimensions* and Shipping Weights in Inches (mm)

MODELS						INLET OPENING		DISCHARGE OPENING		LENGTH	WIDTH	HEIGHT	WEIGHT
Series	WB	CS	FT	AB	SS	A	B	C	D	E	F	G	LBS (KG)
30	✓	✓	✓	✓	✓	21″ (533)	21 1/4″ (540)	35″ (889)	26 1/2″ (673)	40″ (1016)	42 1/4″ (1073)	36″ (914)	3,250 (1,477)
34	✓	✓	✓	✓	✓	33 1/2″ (851)	21 1/4″ (540)	35″ (889)	34 1/4″ (870)	40 3/4″ (1035)	54″ (1372)	36″ (914)	4,000 (1,818)
45	✓	✓	✓	✓	✓	25 1/2″ (648)	41 1/2″ (1054)	55″ (1397)	43 1/2″ (1105)	63″ (1600)	64″ (1626)	54″ (1372)	9,850 (4,477)
55	✓				✓	33 1/2″ (851)	43 1/2″ (1105)	70 3/4″ (1797)	46″ (1168)	85 1/2″ (2172)	72 1/4″ (1835)	63″ (1600)	16,900 (7,682)
56	✓	✓	✓	✓	✓	33 1/2″ (851)	53 1/2″ (1359)	70 3/4″ (1797)	56 3/4″ (1441)	85 1/2″ (2172)	82 1/4″ (2089)	63″ (1600)	20,200 (9,163)
58	✓				✓	33 1/2″ (851)	64″ (1625)	70 3/4″ (1797)	67 1/4″ (1708)	85 1/2″ (2172)	98″ (2489)	69 1/4″ (1759)	25,100 (11,358)
66	✓					35″ (889)	53 1/2″ (1359)	80″ (2032)	57 1/4″ (1454)	93″ (2362)	88 1/4″ (2242)	78″ (1981)	31,700 (14,379)
68	✓					35″ (889)	66 3/4″ (1695)	80″ (2032)	70 3/4″ (1797)	93″ (2362)	113″ (2870)	78″ (1981)	39,100 (17,735)

** Certified drawings will be furnished for installation. Installation supervision is available.*